ISSN 2395-1621

IoT based Smart Pill Box

#1Vivek Jori, #2Parag Jategoankar, #3Tushar Mozar, #4Pratik Sathe

1vivekjori8888@gmail.com
2paragmjategaonkar@gmail.com
3tusharmozar2994@gmail.com
4pratiksathe03@gmail.com

Tssm's Bhivrabai Sawant Collage of Engineering & Research

Savitribai Phule Pune Univercity, Pune,
Maharastra, India.

ABSTRACT

Population aging is a global issue that affects many developing countries such as Taiwan. The natural decline in physical function with aging leads to an increase in incidences of various chronic diseases in elderly individuals; most patients with chronic diseases need to take medications over a prolonged period of time in order to stabilize their conditions. Ensuring that the patients consume the right medication at the appropriate time becomes crucial. Untimed medicine administration can always show adverse effects on the health of the patients. The proposed system is designed to help these patients to take the required medicine in the right proportion at the right time. We propose a design of a medication reminder machine, including both the pill and the continuous medical tablet/powder bag reminder modules. The pill module uses MCU with software to control the LED and the buzzer to remind the user according to a specific schedule which has been inputted.

ARTICLE INFO

Article History

Received: 15th February 2018

Received in revised form :

15th February 2018

Accepted: 17th February 2018

Published online :

17th February 2018

Keywords: IoT; Cloud; ESP8266; Smartphone; Client-Server

I. INTRODUCTION

The fast paced life of people has always taken a toll on the people. The irony is that the new medicines are found for the never ending chain of diseases. These new diseases often require timely medication and course therapy for curing. But the busy life schedule of the people often let down the best procedure. Most common reason for the failure of a method of cure is the failure of the patient to administer the dosage in the right proportion and at right time.

The progress in medical technologies is one of the main contributions for the aging population. Most of the elders have the chronic diseases. Medication safety for the elderly is very important. The most commonly encountered situations of drug abusing are excessive drug usage and disobeying the medication instructions. Incorrect drug usage will cause side effects or loss of efficacy. The worst case may harm body organs or even fatal. However, the degrading memory and cognition cause the elders hard to prevent these problems. The elders need some supports for them to take the drugs correctly.

To solve this problem we proposed a system that can helps to take medicine right time. The system can guarantee that the drugs can be received every scheduled time instance. The additional function can be added such as reminding the elders to buzzing the alarm. One additional function it has such as system will send the notification to patient family member when patient does not take medicine at right time or patient miss the medicine.

II. LITERATURE SURVEY

1. Bidirectional smart pill box monitored through internet and receiving reminding message from remote relatives

This project proposes a design of a medication reminder machine, including both the pill and the continuous medical tablet/powder bag reminder modules. The pill module uses MCU with software to control the LED and the buzzer to remind the user according to a specific schedule which has been inputted. The continuous medical tablet/powder bag module uses a MCU with software to control a motor to dispense the medicine bag one by one. In addition, this design uses a Bluetooth bracelet to cooperate with the reminder machine. The bracelet will sound and flash to remind the user to take pills or medicine powder from a specific bag.

HARDWARE ARCHITECTURE

The hardware architecture diagram in SPB is shown in Fig.1.A9V,2A external power supply was used as the drive. The buck(step-down)circuits supply reduced voltages to avoid the burnout of the medicine sensing circuit. At the same time, the infrared light emitting diodes (IRLED)can be adjusted to suitable intensity. There are four medication sensing sub-circuits, namely, morning, noon, night, and bed time (before sleeping). Each is sensed via three sets of infrared sensors(IRLED and photo detectors). A voltage comparison circuit increases the signal stability. Following the logical judgment with the 3 input AND gate circuit, input to Webduino is made. After Webduino receiving the signals from AND gates, the medication information will be transmitted to the internet (then to the webpage)via WiFi [1]. Reversely, up on receiving the care/remind message from the remote webpage(by user' srelatives), the WiFi receiver will receive a set of analog signals for text display (shown on the LCD of SPB)and voice playback(from the speaker of SPB). As the 2.4- inch LCD screen needs3.3V to drive, a voltage level adjustment circuit is required to step- down the Arduino control signal from 5into 3.3V.Themedication time button circuit can be used to set the clock(alarm)time of four sets of medication. The alarm clock time does not require resetting if the power for SPB is shut down. The voice playback circuit can play the care/remind message via the speaker if the remote webpage sends a message. The software programming flow chart is shown in Fig. 3[2-7].

Medicine Sensing Circuit

This SPB uses an infrared photo interrupter to detect whether there are pills in the compartment, as shown in Fig. 4.To improve the sensitivity, each compartment is installed with three pairs of infrared emission LED and photo-detector receiver sensing circuits. Moreover, to improve the accuracy of the drug sensing signal, slits are installed in front of the infrared LED and photo-detector.

Chinese LCD Display Driver Circuit

The Chinese display uses 2.2 ” TFT LCD (320x240)， which employs ILI9431 as a driver IC. The operating voltage of ILI9431 is 3.3V, whereas the voltage provided by the Arduino single-chip module is 5V. Therefore, we need to add a CD4050IC between Arduino and LCD, thus into 3.3V. The communication protocol between Arduino and peripheral devices uses serial peripheral interface (SPI)format. SPI is mainly composed of six signal lines: serial clock (SCK), master in slave out(MISO), master out slave in (MOSI), CS, DC and RESET, which achieves the communication with equipment via the time difference sent by the signals. In the display of Chinese characters, due to the limit of Arduino module memory, at first we must add a SD memory card and use Photoshop and other mapping software to save the Chinese characters in BMP files (320x240) in the SD memory card. In the process of graphic capture, to avoid any overlap between graphs, we must pay attention to the length and width of graphs during the drawing processes. In the programming, the start position of the graph (Chinese characters) must beset to avoid errors when texts displayed.

Fig.1 Entity photo of the photo-interrupter module with infrared mission LED and receiving photo detector.

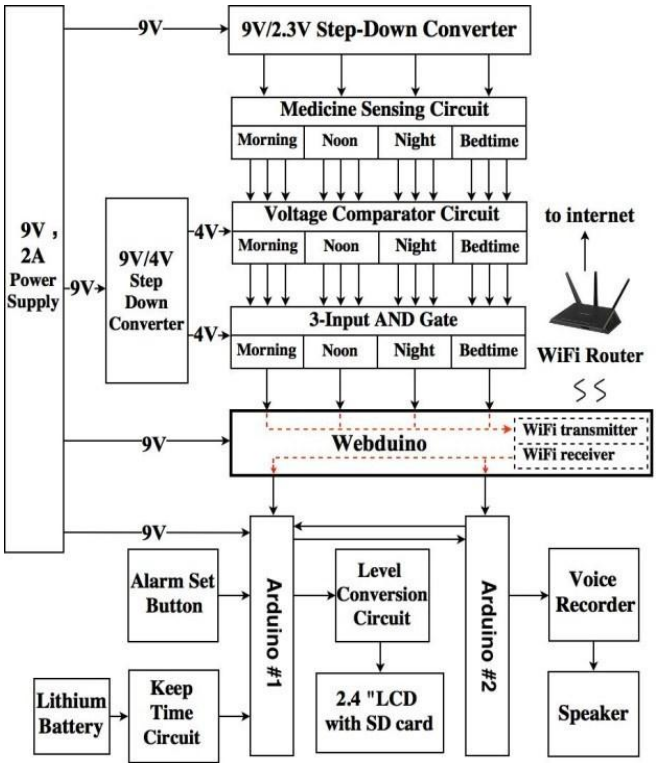

Fig. 2 Hardware architecture diagram

2. Enhancing healthcare using m-care box (monitoring non-compliance of medication)

Many of the people around us forget to take medication on time. The proposed model of smart medical box is a single board computer based assistive device for people who suffer with short term memory loss. It is an alarm based device that helps in reminding patients about their medication. The use of Internet of Things (IoT) concepts and health sensing technologies make diagnosis easier and convenient for the doctors as well as the patients. This project presents an overview of an assistive device for monitoring non-compliance of medication by providing a single platform and a closed loop connection between patients, doctors, and pharmacies. This work gives insight into mechanical design, system architecture and design of android application, information security and integrating the physical system to cloud. The architecture used is a secure one as it uses end-to-end encryption for sending sensor data. This device helps in maintaining one-time medication to the patients, and helps increasing the life expectancy.

III. SYSTEM ARCHITECTURE

A. System Architecture

The total system design lies on single board computer, Raspberry Pi 3 in our case. The sensors for diagnosis are connected to the raspberry pi which sends the data to cloud storage. A relay board is coded in such a way that tray 1 opens for medicines to be taken in the morning, while tray 2 is for medicines for afternoon, while the third tray is for the night medicines according to doctor's prescription as shown in figure 1.

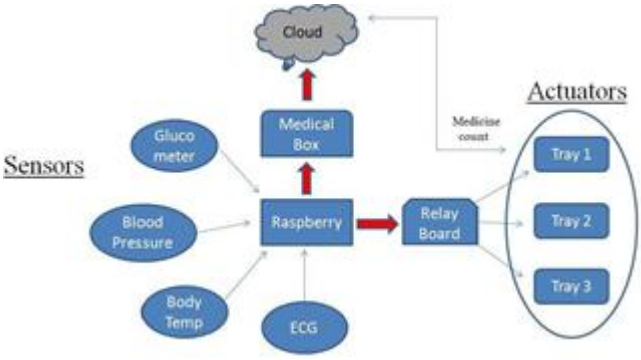

Fig. 1. System Architecture

The whole information is stored in the cloud, the patient data can be accessed only by the doctor. The raspberry pi will be coded in such a way that an alarm notification will be sent to the patient. The number of tablets will be updated in the cloud database. The patient's compliance to the prescription can be monitored by the doctor daily or periodically.

B. Mechanical Design

The medical box consists of 3 trays for the different duration of medication. Each try is attached with a DC motor having rack gear attached to it. The opening of the tray is achieved by meshing the rack gear with pinion attached to the fixed frame of the box. All the motors are actuated using a relay board as shown in figure 2.

C. Data Processing

The data processing at the end point is indeed essential feature as there is a chance of losing packets of data. Crunches of data should be processed properly so that rest of the process does not have unnecessary intervention. The encryption techniques will help immensely to secure the transmission. The data obtained from the raspberry pi is encrypted using end-to-end encryption technique [11]. A table will be created and the data packet is mapped to the table and the obtained value is sent. When the end user requests data, the decryption takes place using cross-table decryption method.

D. Sensors Integration

The medical box integrates variety of sensors to provide the patient's health condition to the doctor.[10] A basic set of bio-sensors are enough to monitor a patient's health condition. These sensor readings can be taken at any point in the day and an analytical graph can be made based on the sensor readings. These graphs and analytics can be only accessed by the doctor. The patient's improvement graph is only updated to the patient.

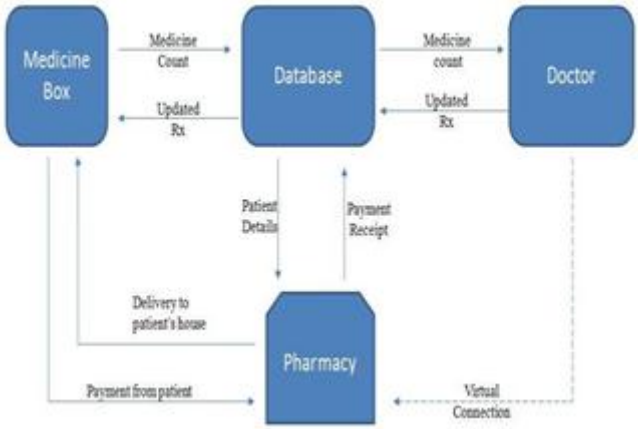

Fig. 3. Process Control Chart

3. Medication adherence by using a hybrid automatic reminder machine

This project proposes a design of a medication reminder machine, including both the pill and the continuous medical tablet/powder bag reminder modules. The pill module uses MCU with software to control the LED and the buzzer to remind the user according to a specific schedule which has been inputted. The continuous medical tablet/powder bag module uses a MCU with software to control a motor to dispense the medicine bag one by one. In addition, this design uses a Bluetooth bracelet to cooperate with the reminder machine. The bracelet will sound and flash to remind the user to take pills or medicine powder from a specific bag.

HARDWARE ARCHITECTURE

Fig. 1 shows the hardware architecture of the medication reminder machine, which consists of the pill reminder and the continuous medical tablet/powder bag reminder. The user, when wearing the required bracelet, connects to the reminder machine by means of Bluetooth which reminds the user to take the medicine according to the inputted schedule .and performing analytics on the sensor readings to predict and prevent dangerous situations.

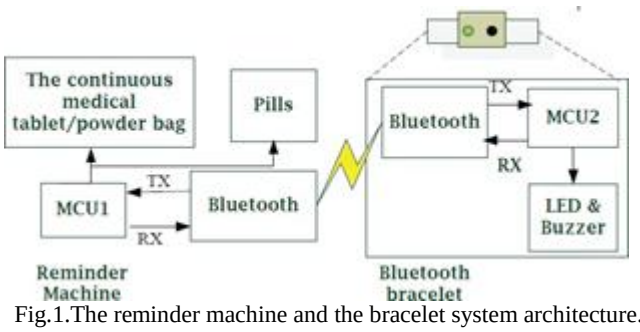

Fig.1.The reminder machine and the bracelet system architecture.

The pill module uses the LED, a buzzer, a Bluetooth module, a MCU, and a LCD. The continuous medical tablet/powder bag uses LEDs, a buzzer, a stepper motor, a Bluetooth module, a MCU, a LCD and a traction machine. Figure 2 shows a medicine reminder machine prototype with dimensions of about 17cm, 15.5cm, 18cm.

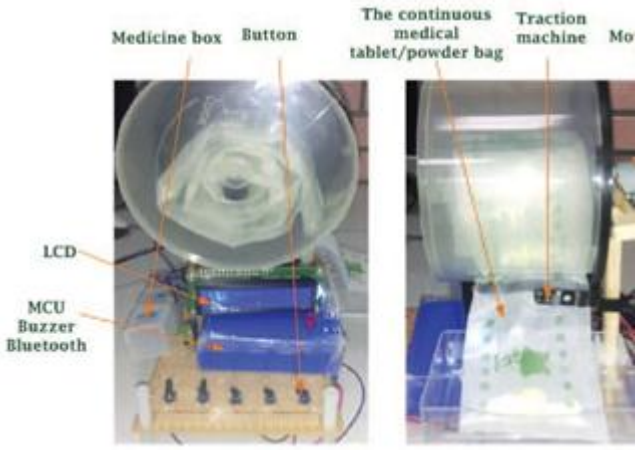

Fig. 2. Medicine reminder machine prototype

Fig. 3 shows a medicine box and the function buttons. The medicine box is divided into three grids, and these three grids correspond to the LED. The function buttons from left to right are: selection mode (morning, noon, night, set time), set minute, set hour, enter and selection of either pills or continuous medical tablet/powder bags.

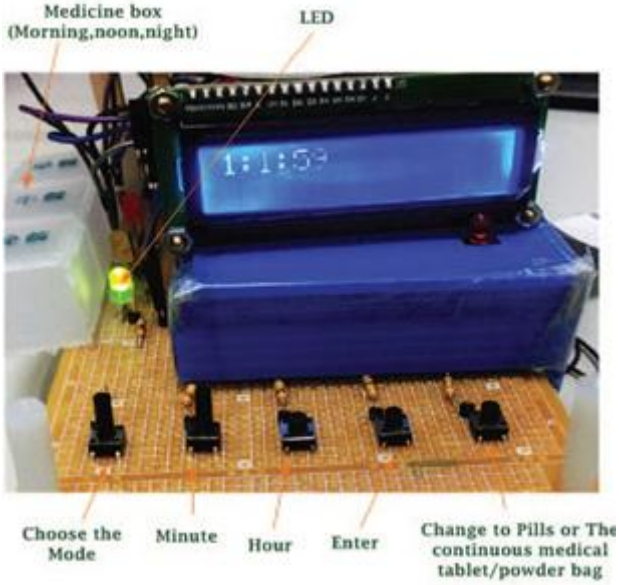

Fig. 3.Medicine box and buttons of the reminder machine.

4. Effective Ways to Use Internet of Things in the Field of Medical and Smart Health Care

The recent advancements in technology and the availability of the Internet make it possible to connect various devices that can communicate with each other and share data. The Internet of Things (IoT) is a new concept that allows users to connect various sensors and smart devices to collect real-time data from the environment. However, it has been observed that a comprehensive platform is still missing in the e-Health and mHealth architectures to use smartphone sensors to sense and transmit important data related to a patient's health. In this project, our contribution is twofold. Firstly, we critically evaluate the existing literature, which discusses the effective ways to deploy IoT in the field of medical and smart health care. Secondly, we propose a new semantic model for patients' e- Health. The proposed model named as 'k- Healthcare' makes use of 4 layers; the sensor layer, the network layer, the Internet layer and the services layer. All layers cooperate with each other effectively and efficiently to provide a platform for accessing patients' health data using smart phones.

5. Smart MATES for Medication Adherence Using Non-intrusive Wearable Sensors

According to the National institute on Aging, 8% of the world's population is over 65 or older. There is a need for a long term care and a remote home-care environment for the aging population using smart technologies as this number expected to double by 2050. With the advancement of embedded sensing technologies, wireless sensing technologies have been used to monitor user's activities and maintain a healthy lifestyle. In this paper, we develop a Smart Medication Alert and Treatment Electronic Systems (Smart MATES) using a non-intrusive wearable sensor system to detect and prevent a home-based patient from missing his or her medication. The sensor collects and processes both the accelerometer and radio signal strength measurement on the left and right wrist. Based on the data collected, Smart MATES correlates the left and right wrist accelerometer reading to model the action of taking medication. If SmartMATES detects the patient is not taking the medication within a time-frame, it will be send an alert to the mobile phone to remind the users to take their medication. We have evaluated the SmartMATES on 9 participants. The results show that the SmartMATES can identify and prevent missing dosage in a less intrusive way than existing mobile application and traditional approaches.

IV. CONCLUSION AND FUTURE WORK

This project proposes system which to help these patients to take the required medicine in the right proportion at the right time. We propose a design of a medication reminder machine, including both the pill and the continuous medical tablet/powder bag reminder modules.

REFERENCES

1. Tsai, Hsiu-Ling, et al. "Bidirectional smart pill box monitored through internet and receiving reminding message from remote relatives." Consumer Electronics-Taiwan (ICCE-TW), 2017 IEEE International Conference on. IEEE, 2017.

2. Bharadwaj, S. Aakash, et al. "Enhancing healthcare using m-care box (monitoring non-compliance of medication)." Innovative Mechanisms for Industry Applications (ICIMIA), 2017 International Conference on. IEEE, 2017.

3. Bai, Ying-Wen, and Ting-HsuanKuo. "Medication adherence by using a hybrid automatic reminder machine." Consumer Electronics (ICCE), 2016 IEEE International Conference on. IEEE, 2016.

4. Othman, NurmizaBinti, and Ong PekEk. "Pill dispenser with alarm via smart phone notification." Consumer Electronics, 2016 IEEE 5th Global Conference on. IEEE, 2016.

5. Shah, Viral, et al. "Smart Medicine Box." Imperial Journal of Interdisciplinary Research 2.5 (2016).

6. Ullah, Kaleem, Munam Ali Shah, and Sijing Zhang. "Effective ways to use Internet of Things in the field of medical and smart health care." Intelligent Systems Engineering (ICISE), 2016 International Conference on. IEEE, 2016.

7. Abdullah, A. H., and T. H. Lim. "SmartMATES for Medication Adherence Using Non-intrusive Wearable Sensors." International Conference on Wireless Mobile Communication and Healthcare. Springer, Cham, 2016.

8. Zanjal, Samir V., and Girish R. Talmale. "Medicine reminder and monitoring system for secure health using IOT." Procedia Computer Science 78 (2016): 471-476.

9. Huang, Shih-Chang, et al. "The intelligent pill box—Design and implementation." Consumer Electronics-Taiwan (ICCE-TW), 2014 IEEE International Conference on. IEEE, 2014.

10. Parra, Juan Marcelo, et al. "Intelligent pillbox: Automatic and programmable Assistive Technology device." Biomedical Engineering (BioMed), 2017 13th IASTED International Conference on. IEEE, 2017.

